Fax Back Document #1401

- **RAV-L**

RAV was developed to absorb high current surge such as indirect lightning. Specifically, the RAV applied to communication circuits will protect it. The RAV is suitable for use with equipment which requires high reliability protection from external surges.

1. Response time: 50ns max.
2. Life: Possible to absorb 1000A for 300 times repeatedly (Surge wave form: 8/20 µs).



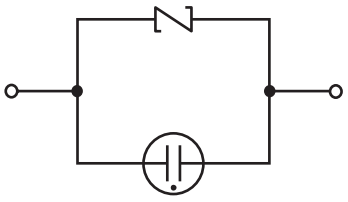

Equivalent Circuit Diagram

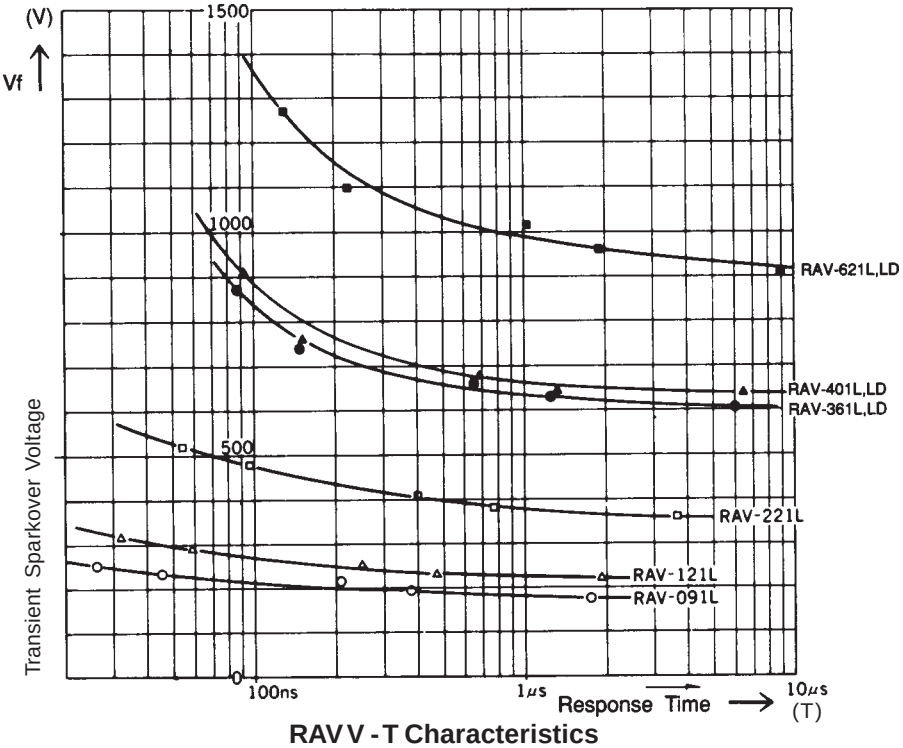

RAV V - T Characteristics

mm

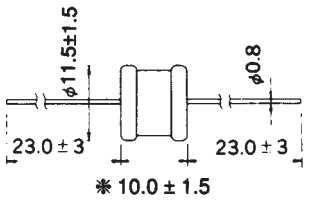

✱ RAV-152L : 17.0 ± 1.5

SURGE ABSORBERS

ELECTRICAL SPECIFICATIONS

Model No.	Clamp Voltage* V1.0 ±10%	Peak Surge Current 8/20µs (A)	Peak Surge Voltage 1.2/500µs (V)	Response Time (ns)	Capacitance (PF) Max.	Operating Temp Range (C)
RAV-091L	90	2400	20K	50	150	-20° to + 70°
RAV-121L	120				130	
RAV-181L	180				100	
RAV-221L	220				90	
RAV-361L	360				30	
RAV-401L	400				30	
RAV-621L	620				40	
RAV-901L	900				30	
RAV-152L	1500				20	

* Equivalent Varistor Voltage @ 1MA

Since the indirect lightning surges entering telecommunication lines have the same voltage and phase, the measures to be taken against the surge must involve placement of a surge absorber between the lines and ground.

For example, in the case of the two-line system shown in the accompanying illustration, the gas arresters A1, A2 are inserted in the lines L1-E and L2-E in order to protect the system, but in this kind of arrangement, there may be a difference in the response time of the elements.

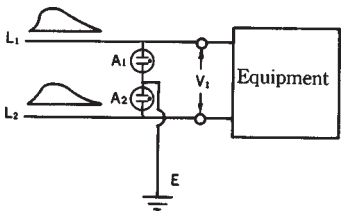

- **Measurement of Transverse Surge:**

A three-pole type of surge absorber is used here to protect a telecommunications line. A comparison can be made between the transverse surges in the gas arrester made by another manufacturer and in Okaya's RAV-361LD, thus allowing an evaluation of the performance of the respective products.

- **Measurement Circuit**

Measurements are made with the circuit shown below, and by observing the current waveform on an oscilloscope.

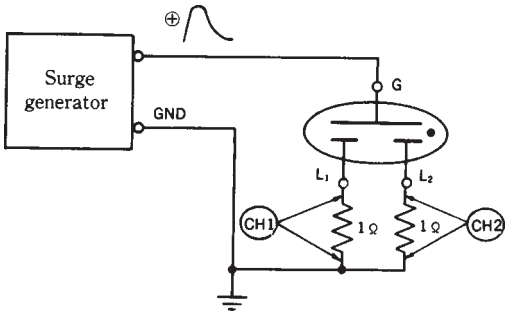

- **Measurement Results**

The gas arrester produced a transverse surge with a width of about 3-4μs, and the generation of that surge is facilitated in cases where the dv/dt is precipitous and voltage is not so great. This surge generation is a result of the V-T characteristics. In contrast, the RAV type resulted in virtually no transverse surge at all.

In general, indirect lightning surge is called "longitudinal surge"; in contrast, the surge caused by the difference in element operating time is called "transverse surge." This condition is illustrated below. The important thing is to prevent the generation of this transverse surge.

